SPECIFICATION APPLIED

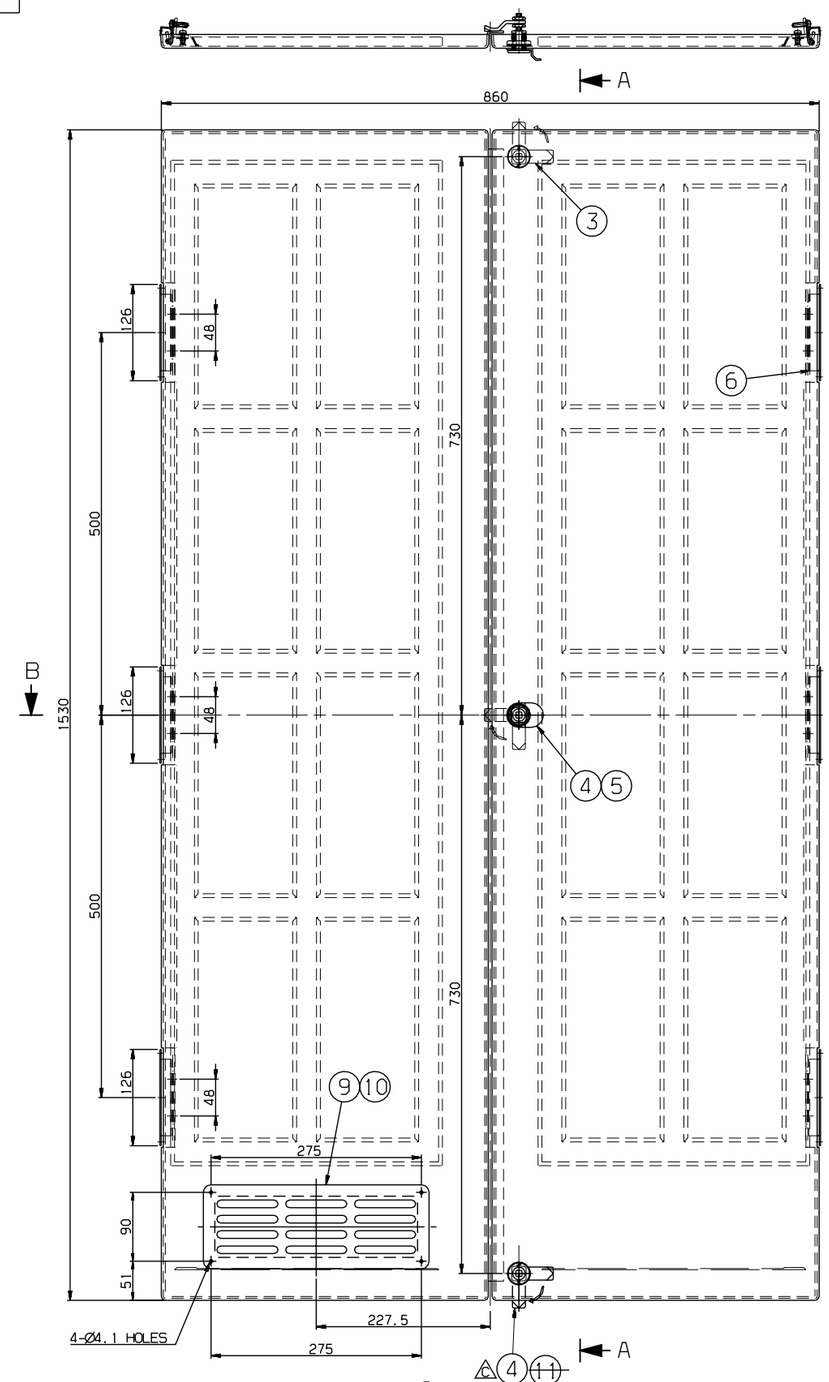

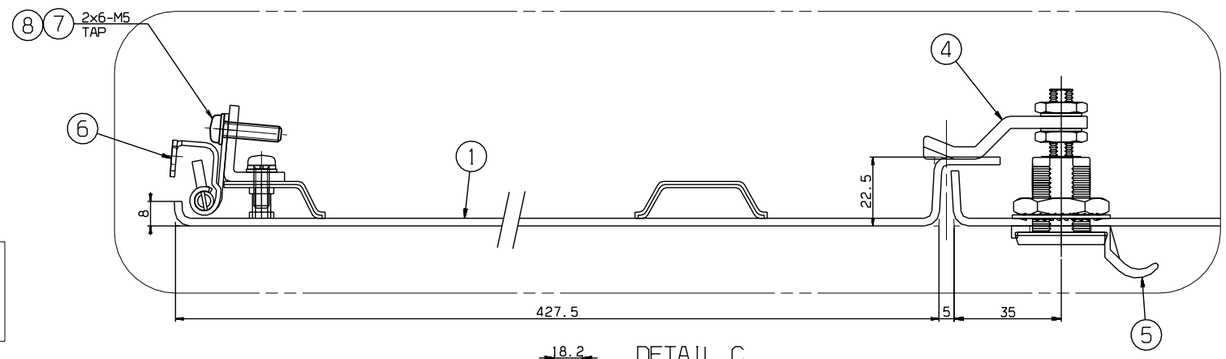

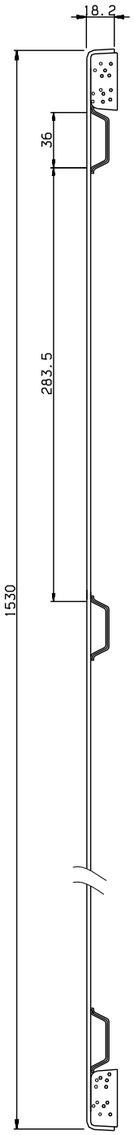

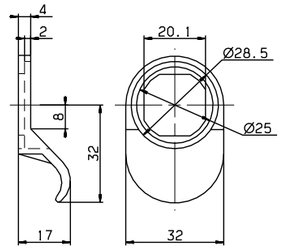

DETAIL 5
SCALE=1/1

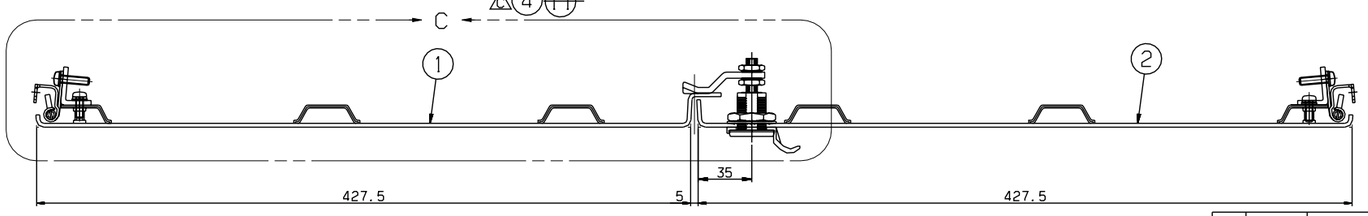

SECTION B-B
SCALE=1/2

SECTION A-A
SCALE=1/2

~ 40	2	4				
~ 30	2	3				
~ 10	1	1.5				
< 3	0.5	1				
~3150	-	7				
~1600	4	5				
~ 800	3	4				
~ 400	2	3				
~ 200	1.5	2				
~ 100	1	1.5				

등급 GRADE	A	B
주물, 수강품 CASTING (±)		
~20M	8	14	24
~15M	7	12	21
~12M	6	10	18
~8M	5	8	14
~4M	4	6	11
~2M	3	4	8
~1M	2	3	6
~315	1	2	4
~120	1	2	3
~30	1	1	1

등급 GRADE	A	B	C
용접 구조물 WELDING (±)			
~20M	-	6.0	8.0
~15M	-	5.0	7.0
~12M	-	4.0	6.0
~8M	-	3.0	5.0
~4M	0.8	2.0	4.0
~2M	0.5	1.2	3.0
~1M	0.3	0.8	2.0
~315	0.2	0.5	1.2
~120	0.15	0.3	0.8
~30	0.1	0.2	0.5
3~6	0.05	0.1	0.2

등급 GRADE	A	B	C
기계 가공품 MACHINING (±)			
수강A와같은 일반공차B GENERAL TOLERANCE			

MARK	DATE	DETAIL OF REVISION(E.C ZONE)	E.C NO.	DGN	CHK	APP
CX3	2011.02.08	CHANGED MODEL NO. OF LOCKING DEVICE.	3D5101-U144	Y.T.KIM	K.B.PARK	J.H.PARK
BX1	2010.01.10	CHANGED REMARKS OF PART NO.*3.	3D5101-U141	Y.T.KIM	K.B.PARK	J.H.PARK
AX1	2009.06.16	DELETE GRILLE.	3D5101-U016	J.I.LEE	H.S.KIM	H.G.RYU

NO.	PART NO.	DESCRIPTION	MATERIAL	Q'TY		V.T	REMARKS
11	~~RFC25007AN0-011~~	~~LOCKING DEVICE~~	ASSY	1			~~COHAMA,F11-02R-A16~~
10	RS60918-063S	RIVET,P.H	SUS304	4	8		P14X8
9	RFC25022AN0	VENT GRILL	ASSY	1	2		
8	RS60801-005S	WASHER,SPRING	SUS304	12			M5
7	RS60610-090S	SCREW R.H	SUS304	12			M5X20
6	RFC25007AN0-006	CONCELALED HINGE	SUS304	6			SOUTHCO F6-1-1-17
5	RFC25007AN0-005	PULL TAP	ASSY	1			COHAMA,DRAWING NO. 200-4703-03
4	RFC25007AN0-004	LOCKING DEVICE	ASSY	2	1		COHAMA,F11-02R-A20 ~~COHAMA,F11-02R-A15~~
3	RFC25007AN0-003	LOCKING DEVICE	ASSY	1		C	COHAMA,F11-02L-A20 ~~COHAMA,F11-02L-A16~~
2	RFC25009AN0	COVER,GDB (2)	ASSY	1			
1	RFC25008AN0	COVER,GDB (1)	ASSY	1			

승인 APP	H.G.RYU 2008.10.10	재질 MAT'L	TITLE: COVER, INSPECTION, GDB
검도 CHK	H.S.KIM 2008.10.10	중량 G.W	
설계 DGN	J.I.LEE 2008.10.10	일반공차 MC VD CT: B B B	DRG. NO: RFC25007AN0 MS; Ver. 00; Rev. -C
제도 DRG		SIZE A1	SCALE 1/4; SHEET 1 of 1
	참고용 REF. NO. FCP03644		HYUNDAI Rotem 현대로템주식회사

08-3D5101 FC-068 난-PRJT 참리본출 CATIA

본 도면은 당사 재산권이 함유되어 있으며, 무단복사/배포 금지됩니다. PROPERTY OF ISSUING ENTITY, CANNOT BE DISTRIBUTED OR REPRODUCED WITHOUT AUTHORIZATION.